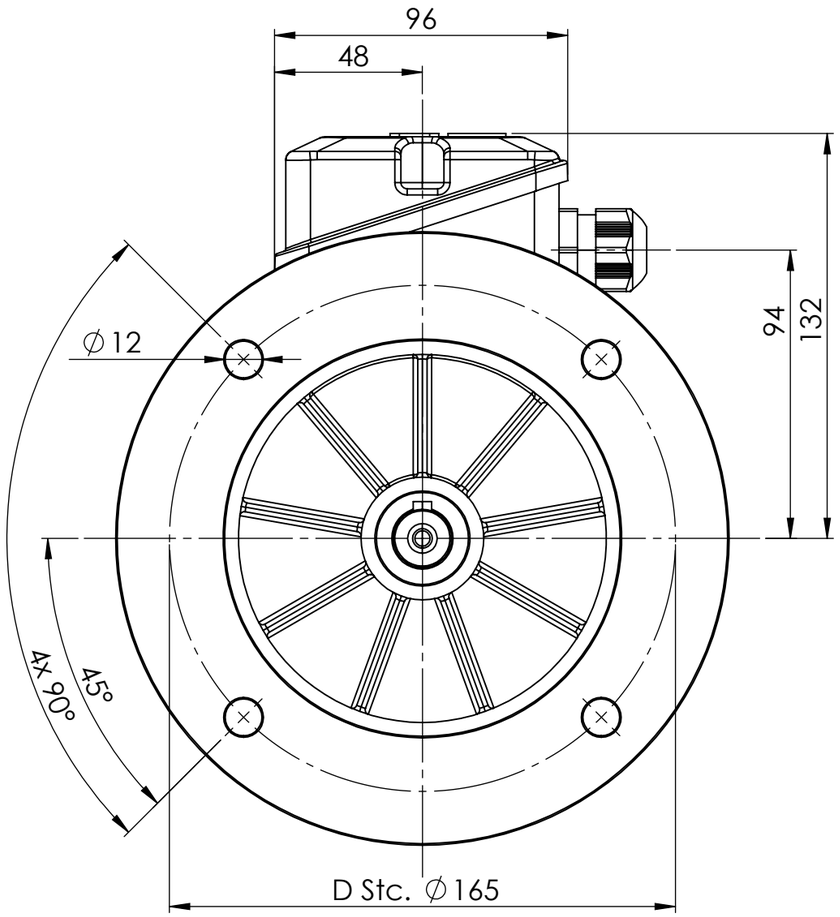

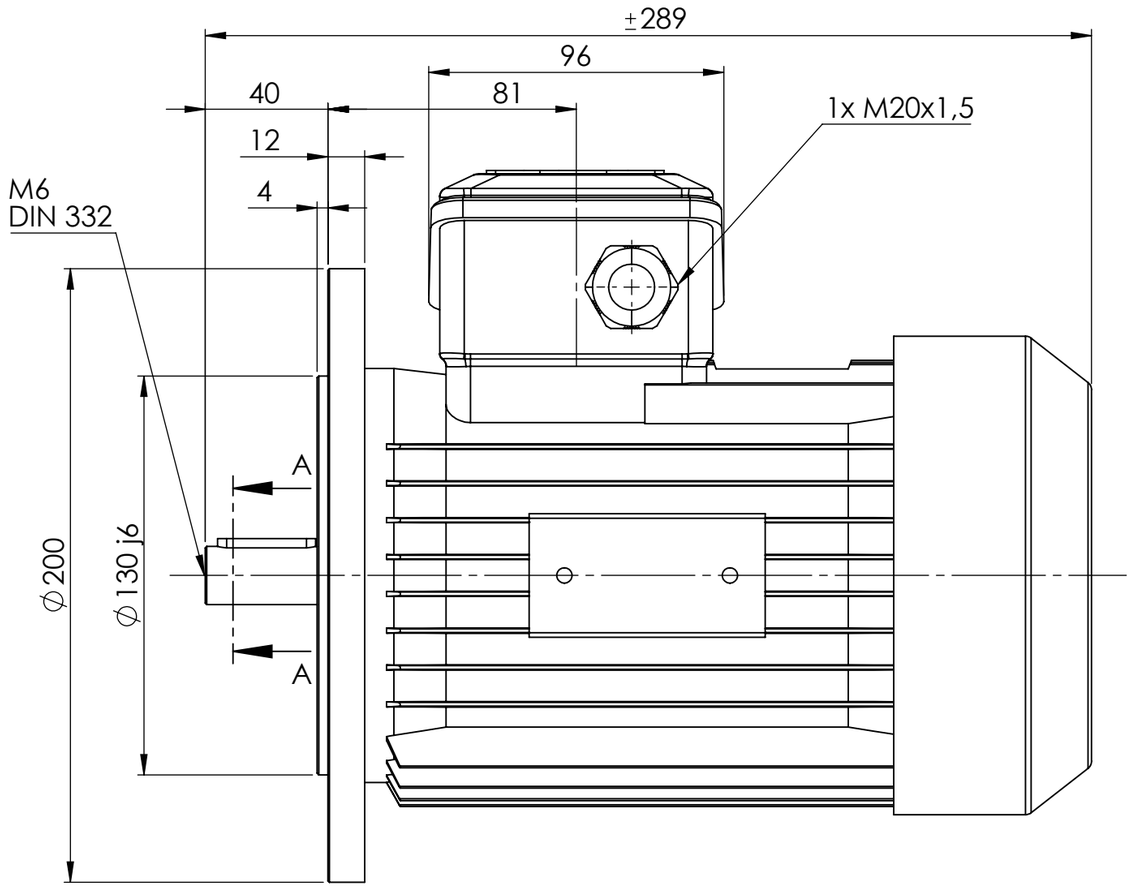

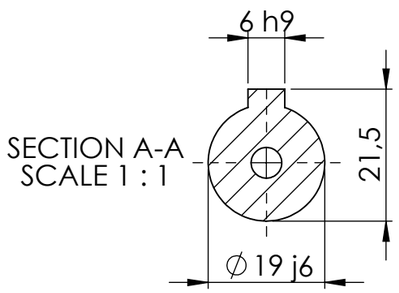

DRAWN: BW	marathon Motors			DRAWING NUMBER: MAP80M2A IM3041		REVISION
DATE: 23-02-2021	ROTOR BV Mors 1-5 7151 MX Eibergen NL Tel: +31(0)545-464640 E-mail: sales.nl@regalbeloit.com			DESCRIPTION: Outline drawing		
CHK'D			REGAL	OPTIONS:		
DATE	GENERAL TOLERANCE ON MACHINED PARTS: LINEAR DIM. ACC. DIN ISO 2768-1 m		ALL DIMENSIONS IN mm ACC. IEC/EN 60072-1			DO NOT SCALE DRAWING
GEN TOLERANCE OF FORM AND POSITION ON MACHINED PARTS: CLASS H - DIN ISO 2768-2	0.5 - 3 ± 0.1 > 3 - 6 ± 0.1 > 6 - 30 ± 0.2 > 30 - 120 ± 0.3	> 120 - 400 ± 0.5 > 400 - 1000 ± 0.8 >1000 - 2000 ± 1.2 >2000 - 4000 ± 2	THIRD ANGLE PROJECTION	MOTOR TYPE: MAP80M2A	COOLING: IC411	PAPER SIZE: A3
				MOUNTING: IM3041 / FF165	PROTECTION	SCALE: 1:2
						SHEET 1 OF 1

This is an uncontrolled copy - document subject to change - alterations reserved without notice